Autogas Dispensers
Installation and Operation Handbook

Document Name	: Autogas Dispensers Installation and Operation Handbook
Document Code	: DIS-14-te
Number of Page	: 45
Issue Date	: 14.04.2006
Revision No	: 4
Last Revision Date	: 19.10.2018

READ THIS HANDBOOK BEFORE INSTALLING YENEN LPG DISPENSERS

Dispensers are powered by electrical energy and contain dangerous, inflammable and potentially explosive liquid. Failure to observe the precautions and warning instructions given in this handbook may cause serious accidents. Observe all rules, codes and laws applicable in your area and your installation.

SAFETY PRECAUTIONS – INSTALLATION AND MAINTENANCE

ALWAYS disconnect the power supply before opening dispenser cabinet for maintenance. Ensure that the valves under the dispenser are closed BEFORE commencing maintenance.

Make sure that you know how to disconnect power input to the dispenser and pump, in case of an emergency. Have all leaks and faults repaired immediately.

Contact Yenen

Any problem relevant to the installation and operation of the Dispenser should be notified to an authorized Yenen Service Partner or Yenen Technical Support Department. (+90 216 487 5924).

Explanation of Symbols

Notice: indicates a special comment or instruction.

Warning: Indicates a hazard, which may cause serious personal injury damage to property if not observed cautiously.

This handbook provides instructions and rules. Remarks and warnings inform the operator about the dangers relevant to the installation and operation of LPG Dispensers. Reading these instructions and thus preventing possible dangerous events is absolutely in the operator's power. Any omission of this responsibility is beyond Yenen's control.

Table of Contents

Page

1.0 About this handbook

This handbook describes the installation and operation of Yenen autogas (LPG) dispensers. For the installation and operation of the employed electronic systems refer to the operation guides of the relevant systems.

For any questions relevant to the installation and operation of the dispenser that are not covered in this handbook, please contact Yenen through info@yenen.com or call +90 216 487 5924.

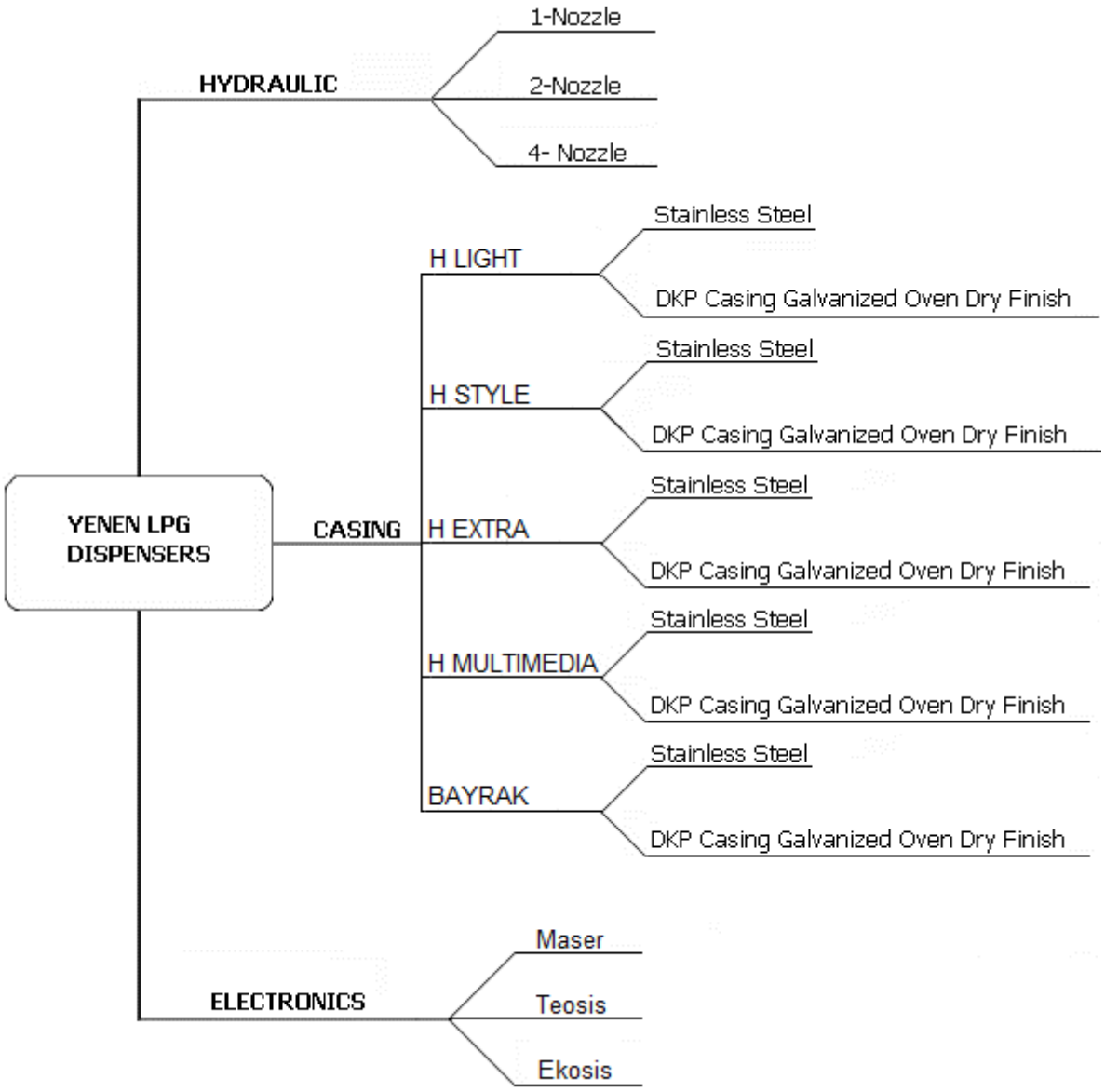

1.1 Applied Standards and Codes

Yenen dispenser is a component of autogas filling system. All parts such as tanks, pumps, pipes and fittings, anti-corrosion devices, cables (electrical and electronic), control system, etc. should be furnished in compliance with the instructions of manufacturers and international and regional standards. Yenen has no obligation to follow above-mentioned standards and codes or modify products pursuant to the amendments made to those codes.

Yenen autogas dispensers may be used with Liquid Petroleum Gas (LPG) that is compliant with TS11939, EN 14678-1 and EN 589.

1.2 Accuracy Requirements

Yenen dispensers comply with the OIML R117 directive, which specifies following LPG dispensers:
Accuracy Class: 1.0
General Accuracy: %1

1.3 Safety Precautions

Only qualified staff, which obtained training for the liquids operating under pressure such as LPG may service Yenen equipment.

ALWAYS disconnect the power supply before commencing maintenance. There may more than one latch to disconnect. Use a multimeter to make sure that all circuits in the dispenser are closed. Failure to take this precaution may cause personal injury.

Ensure that all valves are closed. It may be required to close more than one valve to lock the system. To make sure that ALL valves are closed, review the station piping diagram. Failure to take this precaution may cause personal injury.

Keep all vehicle and unauthorized staff at least 6 meters away from the dispenser.

- Make sure that all required safety precautions have been taken. Make sure that all required ventilation, fire protection, evacuation and fire procedures are provided.
- Make sure that all fire extinguishing tools are easy to reach. Obtain comprehensive knowledge about all safety regulations.
- Read this handbook and all available literature and drawings.
- Yenen recommends you to employ a qualified mechanical and electrical technician. As an explosive liquid is being handled, it is compulsory to make sure that all safety precautions are completely taken at any time.
- Read **DOs** and **DON'T's** in the appendix.

In case of a gas leakage:
1. Shut the leakage by closing closest valve or pushing the shut-down button.
2. Use protective gloves to avoid cold burns.
3. Avoid using fire or any igniting tools around the dispenser.
4. Beware that LPG is heavier than air and therefore settles lower.
5. Evacuate everyone off the danger zone.
6. Make sure that the area is safe for operation. If in doubt, inform the fire department thereof.

In case of gas flare;
1. Shut the leakage if its location is safe to reach.
2. If it is a flare that cannot be controlled safely, contact fire department.
3. If it is a small, controllable ignition, use a proper extinguisher. If in doubt, inform the fire department.

1.4 Required Tools for Installation

- 5mm Allen screwdriver
- Standard screwdriver kit
- Pincers
- Voltage tester screwdriver
- 13mm monkey wrench
- 17mm monkey wrench
- 19mm monkey wrench
- Side cutter (to cut cables)
- 2 adjustable wrenches
- Philips screwdriver
- Curved knife (to open packaging)
- M12 (10.9) bolt and nut
- Cleaning cloth

2.0 Installation

Examine the dispenser immediately upon delivery to make certain that no damage has been occurred. Damaged or lost equipment should be informed to the carrier. Any damage or loss, which may occur during shipping, is not covered under warranty.

Make sure that all components like switches and any optional equipment are present. Check invoice, bill of lading and any similar document relevant to the purchase order and save a copy of them.

2.1 Dangerous Zones

Review relevant codes, standards and regulations first.
Figure 2.1 shows dangerous zones in accordance with European CEN regulations.

Zone 0	Constant or long-term presence of an inflammable and explosive atmosphere. >1000 hours/year Where: In the hydraulic system, in the pipe, meter and control devices.
Zone 1	Where inflammable and explosive atmosphere is high under normal working conditions. =10 – 1000 hours/year Where: Left and right casing columns and around the hydraulic system
Zone 2	Where inflammable and explosive atmosphere is seen rarely or for a short-term under normal working conditions. < 10 hours/year Where: All around the dispenser casing and 1 meter above the casing
Non-dangerous zone	Where inflammable and explosive atmosphere is non-existent. Where: Inside of the electronic system

Figure 2.1 Dangerous Zone Diagram

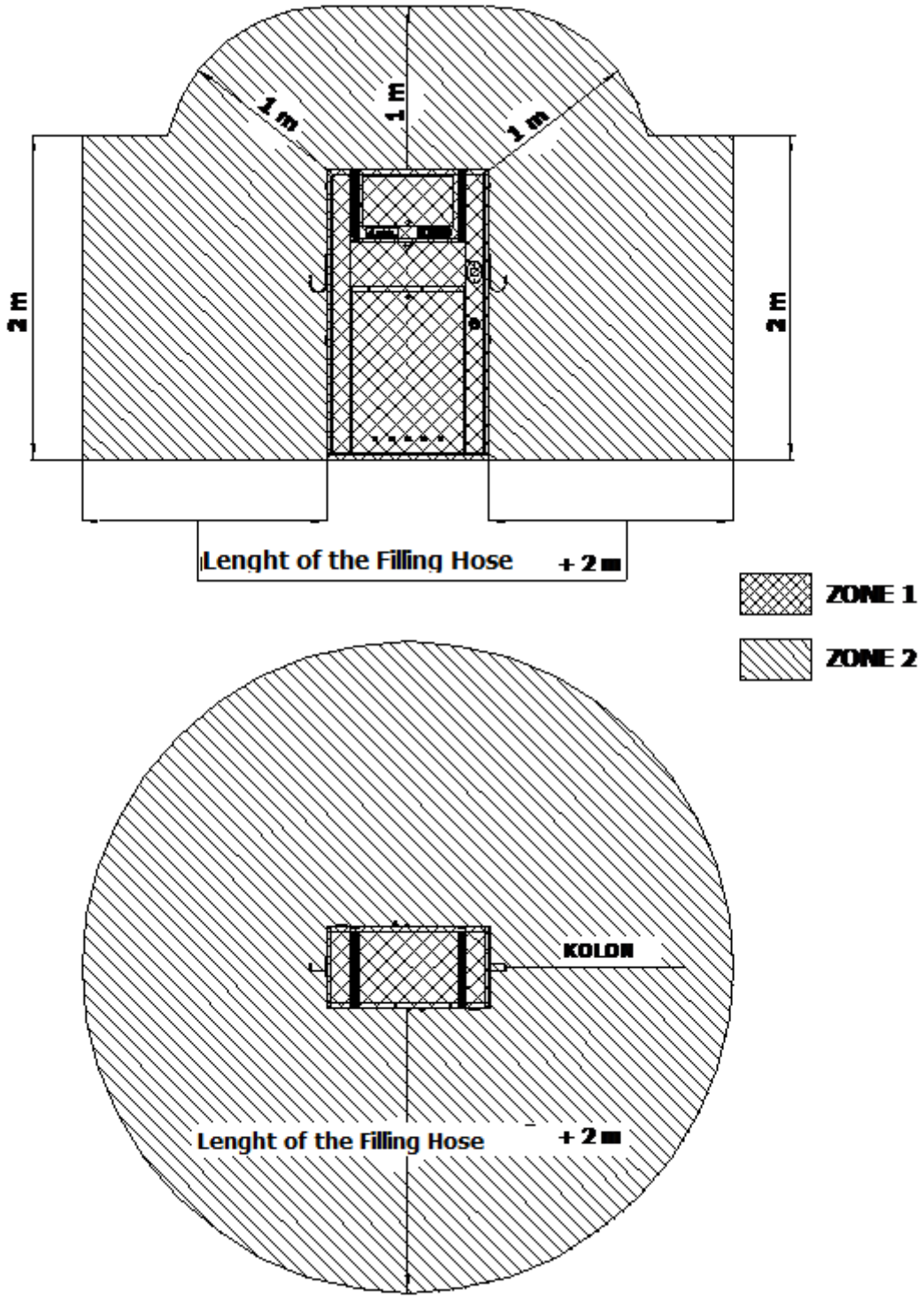

2.2 Dispenser island construction, dispenser anchoring and piping

Take necessary safety actions at the work site. Consider the safety precautions stated in the article 1.3 and DOs and DON'Ts in Appendix C.

Disconnect and anchor.
More than one switch may be utilized to disconnect power supply. Use a multimeter to make sure that all the circuits in the dispenser are closed. Failure to take these precautions may result in personal injury.

Be sure that all valves are closed.
More than one switch may be required to be closed to shut the system down. Refer to station piping drawings to make sure that all valves are closed. Failure to take these precautions may result in personal injury.

- A chassis is required for the dispenser.

Do not pour concrete around the liquid inlet and steam return lines or electrical conduits. Instead, it is recommended to use sand or sandbags to prevent steam build-up under the dispenser.

- Unlatch and remove cap locks to reach the bottom section of the dispenser. Place the caps in a place where they would not be damaged.
- There are bolt holes on the bottom of the dispenser from anchoring it to the chassis. Tightly mount the dispenser to the island.

.

- Remove the plastic caps located on the liquid inlet and steam return line. There may be some test liquid left in the dispenser and may pour out from one of the pipes.
- Connect the liquid and steam return lines. Use flexible pipes in the connection of dispenser and underground pipe tips in order to allow ground movement. Underground piping (steam return and liquid lines) should be at least 1".

Make sure that all connections are leak-proof when making pipe connections.

Use a liquid sealant compound, such as Loxeal 58.11 or other similar liquid compounds (liquid sealant) that is used for LPG applications on male threads only. Be careful not to let compound to leak into the fittings.

.

2.3 Hose Connection

- For an accurate connection, clean all threads and use a liquid sealant (liquid washer).

Make sure that all connections are tight and leak-proof when making pipe connections.

Use a liquid sealant compound, such as Loxeal 58.11 or other similar liquid compounds (liquid sealant) that is used for LPG applications on male threads only. Be careful not to let compound to leak into the fittings.

- Connect hose assembly to the dispenser outlet and hose hooks to the side doors. If the dispenser has a pipe retraction system, refer to the instructions for the connection as well.

- Connect the steel rope of the safety cable of the break-away coupling to the dispenser frame. It is designed so that LPG is present on both sides of the point, where break-away is located and it should be connected to each hose. Only a couple cubic centimeters of LPG escape during removal.

- Check the electrical continuity on the hose/nozzle connection. There should be no continuity between the dispenser outlet and the nozzle to prevent static discharge during filling. In order to make sure that the nozzle is grounded, each hose assembly should be checked.

- Connect crocodile clips to the dispenser chassis.

2.4 Dispenser Sealing Test

After completing the steps in the sections 2.2 and 2.3, the dispenser connections should be checked for leakages.

- Slowly open the valves on the tank section.
- Slowly open steam return line and liquid line (V1) valves (See. Figure 2.2.)
- Open the valve between the filter and gas separator (V2) (See. Figure 2.2)
- Check all connections with lather for leakages.
- In case of a leakage, close all valves, repair the leakage and check again.
- When all connections are tightened, close all valves and continue with electrical connection. (Section 2.5).

The above steps are just guidelines. Consider standards and regulations for legal tests.

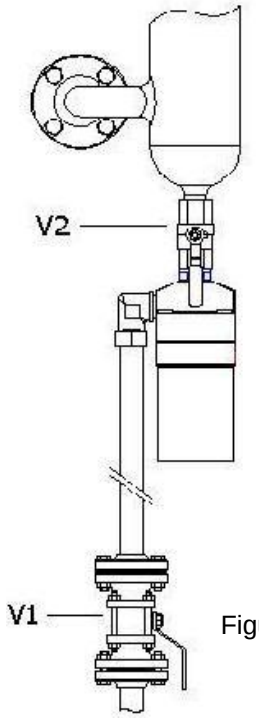

Figure 2.2

2.5 Electrical Connection

All dispensers and electrical connection boxes should be grounded.

ALWAYS make sure that the power supply is disconnected and locked before commencing maintenance of the dispenser. There may be more than one button to disconnect the power supply. Use a multimeter to make sure that ALL circuits of the dispenser are closed. Failure to take these precautions may cause personal injury.

Electrical specifications:

a. Voltage: 220 Volts AC (180 – 250 Volts AC)
b. Frequency: 50Hz or 60Hz
c. Energy consumption: <40 Watt (in maximum configuration)

A stable power supply is required for the operation of the electrical components within the dispenser. Precautions should be taken thereof, where a stable and constant power supply is not available.

- Review the location of the dispenser junction box.
- For full service and stand-alone operation, make electrical installation in accordance with the electrical connection scheme in the Appendix A.
- A display lighting circuit that is connected to the power control circuit at the terminal adjustment strip in the dispenser junction box is delivered along with the dispenser. The display lighting may be connected to a separate circuit breaker or switch via those terminals. Jumping these terminals shall keep display light activated permanently – see. Appendix A.
- In addition to the connections required for stand-alone operation, the dispenser may be connected to a remote host or POS system.
- If optional data cables are required for future use, those should not be connected to the data terminals in the junction box. Instead, separate glands should be used for each of them.
- Do not connect the connections of the equipment irrelevant to the dispenser to the dispenser wiring circuit. Those cables should be connected to another circuit.
- Connect the dispenser to a grounding line in order to dissipate charge.

2.6 Function Test

Before applying power to the dispenser, double-check the connections to make sure that the wires are connected and polarized correctly. See Section 3.

Commissioning procedures specified in this section should be performed sequentially for correct operation of the new installations.

Before dispensing any product, make sure that above-ground pumps are commissioned. – Refer to the manufacturer's handbook thereof.

- Turn on the dispenser power control circuit breaker, lighting circuit breaker, if connected, and pump engine circuit breaker. Make sure that the dispenser is started-up. Dispenser displays shall show a couple test messages and usually the last sale in the factory tests.

  If the dispenser has not been powered or used for a while, an error message like "no electricity" shall be shown due to discharged condensers. Wait for a while until the condensers are charged.

- Remove the plug from the nozzle tip.
- Connect the nozzle to the filler inlet on the dispenser casing.
- Open the globe valve under the inlet.
- Switch the dispenser "on" with the "on/off" switch.
- Now the reset sequence shall start. Display shall reset itself.
- Observe that the solenoid valve opens – hear the click sound of the valves.
- The dispenser shall circulate LPG back into the tank through the steam return line. Observe the process on the display(s).
- Before continuing, make sure that sufficient LPG is circulated to ensure that all the air in the dispenser and lines is completely disposed.
- Switch the dispenser "off".
- Close the globe valve under the nozzle tip.
- Pull out the nozzle and place the plug back.

2.6.1 Preset

- Enter price and amount to the preset control panel.
- Switch the dispenser “on” with “on/off” switch.
- Reset sequence shall start. Display shall reset itself.
- The dispenser shall circulate LPG into the tank through the steam return line. Observe the process on the display(s).
- The flow rate shall slow down toward the end of the process in order to complete the process at the preset value.
- The dispenser shall cease to fill at the preset value.
- Switch the dispenser “off”.

2.6.2 Non-volatile memory check.

- Switch the dispenser “on” with the “on/off” switch.
- Reset sequence shall start. Display shall reset itself.
- The dispenser shall circulate LPG into the tank through the steam return line. Observe the process on the display(s).
- Shut down the main power supply to the dispenser during the process.
- Solenoid valves shall be closed and filling shall stop immediately.
- Switch the dispenser “off”.
- The display shall show “no electricity” message and the last process for 20 minutes.
- The data shall be stored in EPROM and displayed again when the power is restored. The last process is saved permanently.

2.6.3 Emergency Shut-down System (ESS)

- Switch the dispenser “on” with the “on/off” switch.
- Reset sequence shall start. Display shall reset itself.
- The dispenser shall circulate LPG into the tank through the steam return line. Observe the process on the display(s).
- Press ESS button during the process.
- Solenoid valves shall be closed and the delivery shall stop immediately.
- Switch the dispenser “off”.
- The display shall show “no electricity” message and the last process.

2.6.4 Flow Interruption

- Switch the dispenser “on” with the “on/off” switch.
- Reset sequence shall start. Display shall reset itself.
- The dispenser shall circulate LPG into the tank through the steam return line. Observe the process on the display(s).
- Close the globe valve on the liquid line during the process.
- Observe that the product is not dispensed.
- The CPU shall cease the delivery in 60 seconds.
- Switch the dispenser “off”.

3.0 Operation

3.1 Before Commissioning the Dispenser

- Learn how to shut down the power supply to the dispenser and pump in case of an emergency.
- Test break-away coupling by pulling its both ends.
- Regularly check hose, nozzle and break-away coupling.
- Regularly check dispenser casing and hydraulic section against damages and leakage.

3.2 Programming the ATC System

For the dispensers equipped with Automatic Temperature Compensation - ATC System, the LPG compound should be defined into the ATC System. Default from factory, this compound is preset to 30% butane and 70% propane.

For accurate measurements, it important to set ATC in accordance with the LPG compound.

Neglect this responsibility may result in inaccurate readings and it is beyond Yenen's control.

4.0 Rules to consider during transportation and shipping

- Dispenser should not be removed from its packing during transportation and storage packaging.
- Dispenser must be transported by paying attention to the directional arrows on the meter box during the transportation.
- Do not place heavy objects on the dispenser package.
- Dispenser should be protected from water and moisture during transportation.
- Dispenser should be moved slowly and carefully. Otherwise CPU and displays may be damaged.

5.0 General Maintenance

5.1 General Safety Precautions

A safe operation is critical for the safety of the staff and customers. Read and comprehend following recommendations:

- Do not allow pumpers to use damaged/broken components like hose assembly.
- Prevent them from using dispensers with open or missing caps.
- Place an explicit and comprehensible operation instructions on the dispensers.

5.2 Preventive Maintenance

Consider the safety precautions specified in the Section 1.3 when conducting any maintenance on the dispenser. As long as the maintenance of a correctly installed dispenser is done appropriately and regularly, it rarely needs an emergency service.

Perform following inspections regularly.

- Keep the dispenser clean at all times. Apply a non-abrasive, silicon based polish at least 4 times a year, in order to maintain glossy looks and prevent corrosion on all stainless steel parts. Painted parts may be applied with a regular automobile polish. Application intervals may be adjusted in accordance with climate and regional conditions.
- Wipe dusty and dirty areas regularly with a soft cloth. Do not use excessive water.
- Check all LPG carrier parts like hose, break-away and nozzle against possible leaks and damages.

If you detect damage on the hose assembly, immediately cease to use the dispenser. Continuing to operate it may result in personal injury and property loss. Close all valves and fix hose assembly.

- Check for sharp edges that may cause slashes on the casing.
- Check hydraulics for leakage.

If you detect damage on the hose assembly, immediately cease to use the dispenser. Continuing to operate it may result in personal injury and property loss. Close all valves and fix the leakage. (See Section 2.4)

- As the LPG taken from the refinery may contain water, dirt and aggressive hydrocarbons, check the tank regularly. Contaminated LPG may cause serious damage in the dispenser. (See Section 1.1)
- Use only genuine spare parts provided by Yenen on the dispenser. Using spare parts other than genuine Yenen spare parts may impose safety risks and therefore shall violate all obtained permissions and warranty.

5.3 Filter

- Generally speaking, a clogged filter shall slow down the flow rate. For new installations, it may be necessary to replace filter several times within the first week of operation, as there may be some debris and pipe insulation parts left from the installation.
- Depending on the quality of gas, the filter should be replaced for every 1 million liters, 6 months or if flow rate slows down.
- A 2 bar or more difference at the pump outlet and dispenser liquid line during the operation of the dispenser and pump indicates that the filter is clogged.
- Read Yenen’s filter replacement instructions. ITL-SRV-7.5.1-008

5.4 Calibration and Counter Maintenance

Calibration intervals of the dispenser are regulated by local specifications. OIML R117 specifies calibrations at least once a year or if there are any changes in the LPG inventory.

Some precise measurement parts are sealed in order to restrict their repair and modification. Only authorized and certified persons may break and reseal those.

For the adjustment of the dispenser, follow the procedures that are defined by local authorities and read Yenen LPG flow meter and operation handbook. LFM-02.

5.5 Electronic Calibration

For electronic calibration process, follow the given instructions;

- Enter the Service Menu.
- Go to WM Setup
- At WM Setup menu, select the WM Calibration.
- Enter the Code (password)
- When **20 liters** are given from the mastermeter, a calibration value on the dispenser's preset screen will be seen (+60, -40, etc..).
- Press the SET button. CPU will make the calibration automatically according to that value.

The calibration limits at 20 liters are ±200ml.

These calibration process should be done by authorized and certified persons.

6.0 S4S Electronics

6.1 Keypad Information Display

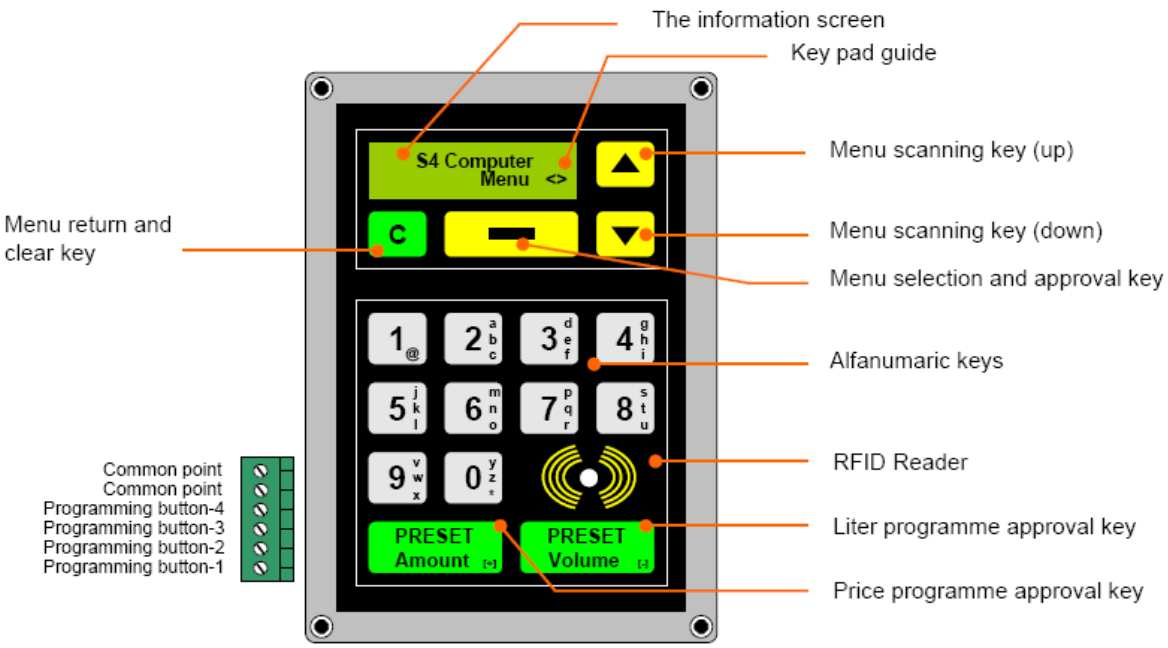

Key guide :
It guides for usage of keys, and shows which keys to use while processing an operation or while making a choice.

Meanings :
< > : Menu scanning and menu return keys are active.
<N> : Menu scanning, menu return and numeric keys are active.
<1> : Menu scanning, menu return and 0-1 keys are active.
<4> : Menu scanning, menu return and 0-4 keys are active.
<A> : Menu scanning, menu return and alfanumeric keys are active.
N : Numeric keys and clear key are active.

Menu Selection and approval key:
It used to approve the operation you chose by using the menu scanning keys.the name of this key is changed the screen according to menu operations with which you are making operations.
Thus it helps youn to do your operations with ease.

Menu return and clesr key :
İt is used to return from the menu and menu sub functions as well as to clear the digit or character you have entered while making data entry.
It returns to one upper menu or function each time it is pressed.

Menu scanning keys :
They are used to scan the menus and the sub functions.

Programming approval keys :
They are used to approve the entered price and liter programme.

Note:
The system will return automatically to a logo screen, if any operation is made in two seconds when any of the menu is selected.

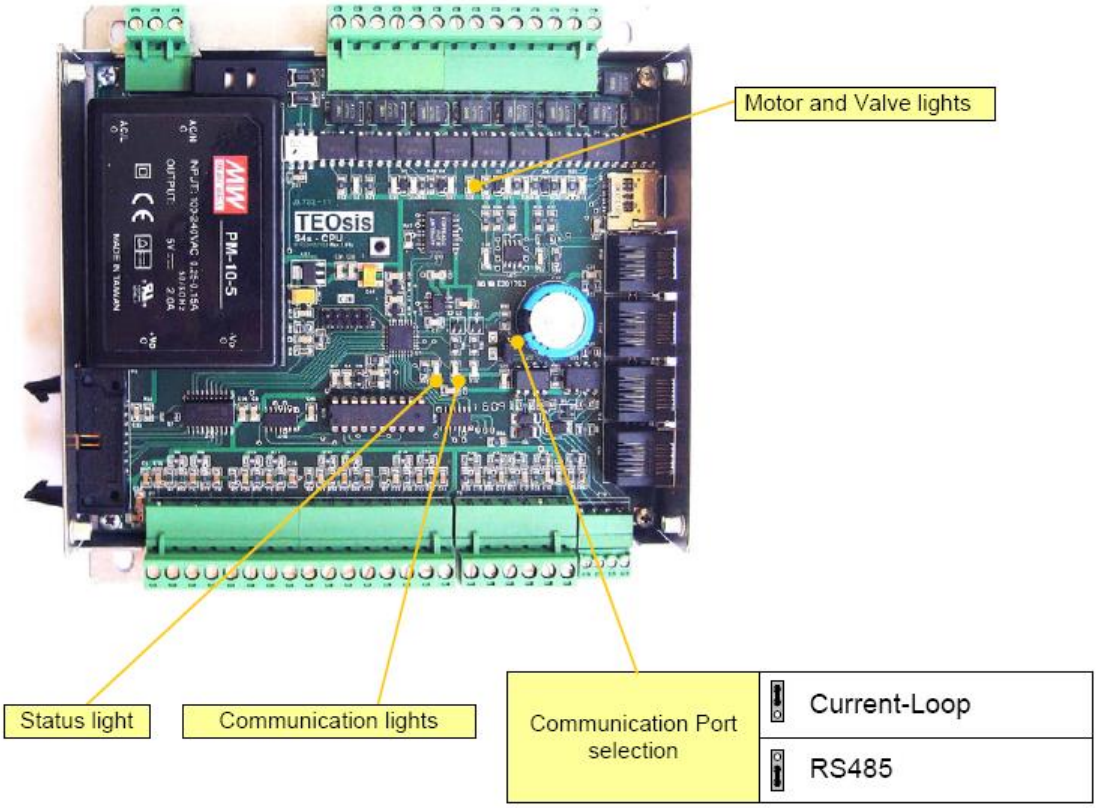
Motor and Valve lights
Status light
Communication lights
Communication Port selection
Current-Loop
RS485

6.2 Display Connections and Address Settings

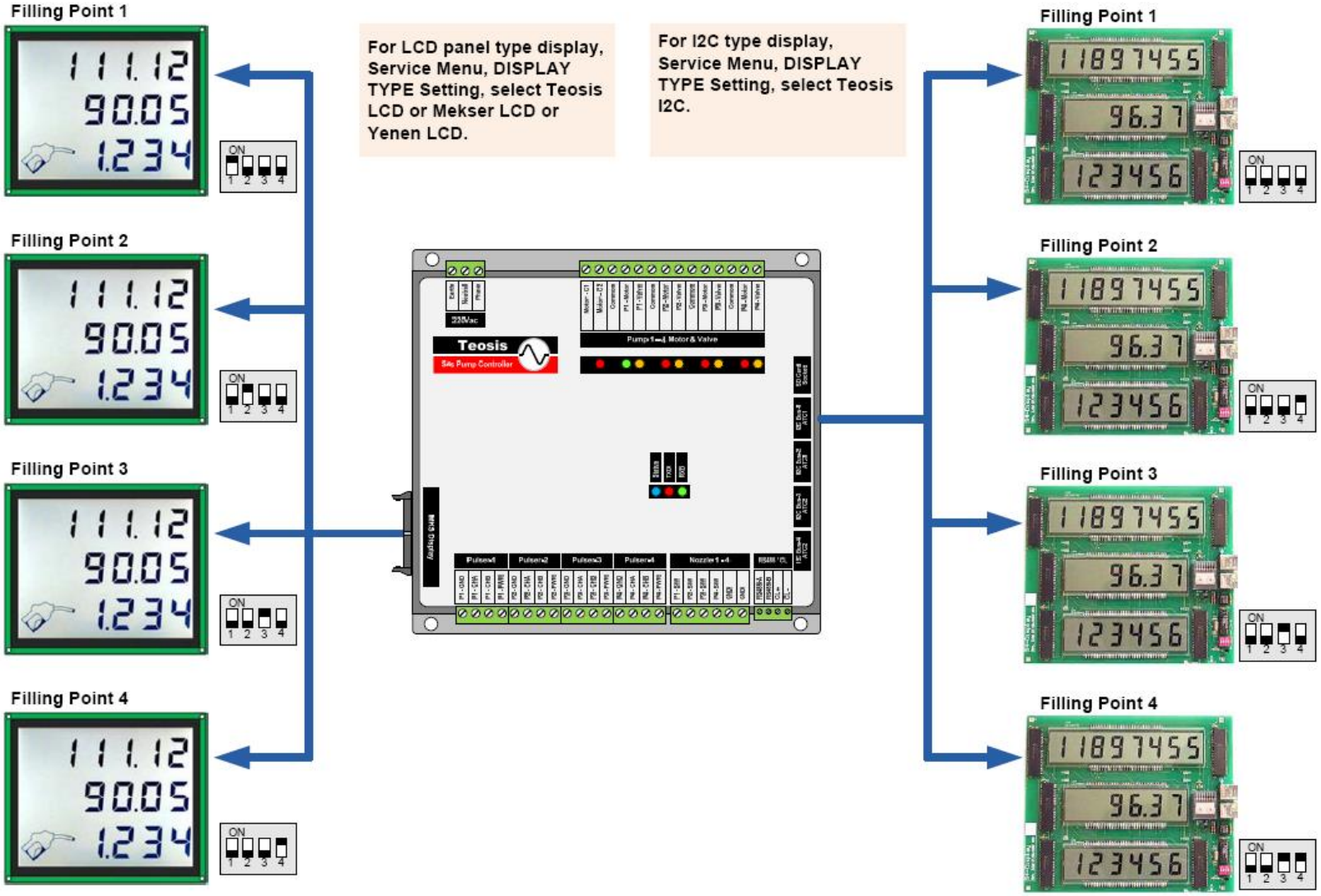

6.3 Technical Features

Configurations :	16 Possible configurations (see configuration table)
Max. throughput :	300 Lt. / Minute
Sale Display :	Back-lit LCD 1"
Amount :	6 figures, selectable decimal points
Volume :	6 figures, selectable decimal points
Unit Price :	4 figures, selectable decimal points
Info Display :	2x16 alphanumeric character LCD
Measuring Units :	Liters or Gallons or Kilogram
Memory :	128KB Flash 8KB RAM 64KB FRAM
Output Signals :	5 Motor Remote Control (24/110/220Vac) 4 Solenoid Valve Control (24/110/220Vac) 4 Vapour recovery system control
Input Signals :	4 Pulsers with 2 Channels (selectable pulse density) 4 Nozzle Switches 4 Preset Buttons
Preset Programming :	Amount Preset (Button and/or keypad) Volume Preset (Button and/or keypad)
Communication :	Current-Loop RS485 I2C Bus 1W Bus
Protocols :	Modbus Teosis - GPP S4 - DART Fiscal Mode
Automoted Operations:	Pre-Pay Systems Post-Pay Systems Wehicle/Customer/Pump Attendant Identification Systems and Site Controller Cash Register
Specifications :	
Voltage :	220 Vac 50%
Frequency :	50/60 Hz 10%
Power :	10 W max
Temperature :	-30 +60 °C
RFID :	Radio-Frequency TAG Reader. (Optional)
ATC :	Temperature Sensor For Automatic Temperature Correction (ATC) Max 4 sensor
Conformity :	EN 50081-1 OIML subcommittee TC8/SC3
Keypad :	4x4 Membrane and 2x16 alfanumeric character LCD
Dimensions :	160x130x35mm.
Weight :	1 kg.

6.4 Emergency Stop Operation — Pump Menu

Explanation :
It is used to stop the pump immediately while filling when required.

Order of pressing keys :

S4s COMPUTER Menu <N>	See the logo screen for operation. (if you are in the menu, return to logo screen using a menu return key)
C ▲ ▼	Select the nozzle number that you want to stop using menu scanning keys. You can exit the operation using a menu return key.
EMERGENCY STOP-1 Stop < >	You will see the nozzle number that you want to stop on the screen
▬	You can stop the nozzle you have chosen by pressing on approval key.

6.5 Password Entry — Pump Menu

Explanation :
The password entry operation needed to inter administrative menu and the service menu.
4 digit place password is required for entering administrator menu, and this password can be changed again in an administrator menu, factory output is "0000".
For service menu 6 digit place password and a 4 digit place PIN code is needed.
PIN code is different for every autharized service personnel.
If you enter to a service menu all menues are activated, and if you enter to an administrator menu the pump menu and an administrator menu are activated .

The order of processing the keys:

6.5.1 Administrator Menu Entry

S4s COMPUTER Menu <N>	See the logo screen for operation. (if you are in the menu, return to logo screen using the menu return key)
C N	Enter the 4 digit password by pressing the numeric keys.
1234 Pass N	You can clear backwards the last entered digits using a clear key when required.
▬	Approve the password that you have entered by pressing the approval key.
C	You can exit from menu by pressing menu return key.

6.5.2 Service Menu Entry

S4s COMPUTER Menu <N>	See the logo screen for the operation (if you are in the menu return to logo screen using menu return key).
C N	Enter the 6 digit password by pressing the numeric keys. You can clear backwards the last entered digits using a clear key when required.
123456 Pass N	You can clear backwards the last entered digits using a clear key when required.
▬	Approve the password you have entered by pressing the approval key.
PIN : **** Ok N	The PIN number is asked ,If the entered 6 digit service password is correct.
▬	When an entered four digit pin number is approved ,the service menu is activated.
C	You can exit from menu using the menu return key.

6.6 Sales Programming (Preset) Operation — Pump Menu

Explanation :
It is used to program pump sales amounts (money and liter) before sales procedures. Preset programming operations can be done using key pad and preset buttons. Preset changes for preset buttons and key pad can be done inside the administrator menu.
Enter "0" and do the following operations in order to cancel the entered programme.

Order of pressing keys:

S4s COMPUTER Menu <N>	See the logo screen for the operation (if you are in the menu, return to logo screen using the menu return key) .
C N	Enter the amount that you want to programme using numeric keys. You can clear backwards the last entered digits .
10000 Pass N	If it zeroes the preset settings defined, will be added to the entered value.
PRESET Amount / PRESET Volume	Press "Volume" for liter and "Amount " for money .
NOZZLE NO : <4>	The nozzle number is asked, if the filling points are more than one.
1-4	The programmed value will be shown on the sales screen when you enter the nozzle number.

6.7 Programming with Preset Button — Pump Menu

For every sales point there exist 1-4 units price preset button related with pump construction settings.Every time the button is pressed when the nozzle is at its own location ,the previously defined Button-1 amount will be doubled and seen on the sales screen.In order to cancel the programme press the button for 2-3 seconds ,preset will be zeroized and previous sales screen will appear.

Notes:

1.For multiple product single sales point pumps,the given preset amount will be applicable to the product whose product nozzle is raised first.

2.The entered preset amount will not be valid if the amount is out of the sales screen limits.

3.Preset operation is cancelled after the defined time limit in preset changes. (if the sales was not made in that time limit)

4.The valve settings in service menu must be adjusted before preset operations.

5.Preset buttons are varied according to the number of filling points. If there is only one filling point then 4 buttons can be programmed for the same filling point. If there are 4 filling points ,then for every filling point only one button will be valid.

The configurations of the buttons can be seen on configuration settings table.

6.8 Amount, Liter and Sales Totals — Pump Menu

Explanation:
Nondeletable price, liter and sales totals are the cumulative totals of the sales.

Order of pressing the keys:

If you are inside a menu then by using scanning keys,if you are on the logo screen then first by using approval key and then by means of menu scanning keys you can choose whatever you need inside "AMOUNT TOTALS" , "LITER TOTALS" ,and "SALES TOTALS".

```
TOTAL AMOUNT
   Select   < >
```

```
TOTAL VOLUME
   Select   < >
```

```
TOTAL SALES
   Select   < >
```

You can see the totals that you have chosen by pressing on approval key.

```
[1]: 123456789.0
              < >
```

If there are more than one filling points ,then you can watch the totals of other nozzles by using menu scanning keys.The digit "[1]" on the top left corner of the screen shows the nozzle number.

```
[2]: 123456789.0
              < >
```

```
[3]: 123456789.0
              < >
```

```
[4]: 123456789.0
              < >
```

C

You can exit the menu by using menu return key.

6.9 Previous Sales — Pump Menu

Explanation :
It shows the price sum of previous sales.

The order of pressing keys:

If you are inside menu then by using scanning keys,or İf you are on the logo screen chose "PREVIOUS SALES" menu first by pressing approval key and then menu scanning keys

```
PREVIOUS SALES
   Select   < >
```

You can watch previous sales sums by pressing an approval key.

```
[1]:   1.234 EUR
              < >
```

If there are more than one filling points ,then you can watch the sales of other nozzles by using menu scanning keys.The digit "[1]" on the top left corner of the screen shows the nozzle number.

```
[2]:   1.234 EUR
              < >
```

```
[3]:   1.234 EUR
              < >
```

```
[4]:   1.234 EUR
              < >
```

C

You can exit the menu by using menu return key.

6.10 Flowrate Indicator — Pump Menu

Explanation :
It shows the flow rate of the pump in terms of liter/minute unit.

Order of pressing keys:

If you are inside the menu then by using scanning keys,or If you are on the logo screen chose "FLOW RATE" menu first by pressing an approval key and then menu scanning keys.

```
FLOW RATE
   Select   < >
```

You can watch flow rate of the pump by pressing an approval key.

```
[1]:lt/mn.    60
              < >
```

If there are more than one filling points ,then you can watch the flow rate of other nozzles by using menu scanning keys.The digit "[1]" on the top left corner of the screen shows the nozzle number.

```
[2]:lt/mn.    60
              < >
```

```
[3]:lt/mn.    60
              < >
```

```
[4]:lt/mn.    60
              < >
```

C

You can exit the menu by using menu return key.

6.11 ATC Temperature — Pump Menu

Explanation :
If the ATC feature is active then it shows the sensor temperatures and a VCF (Volume Correction Factor) values.
(if this choice is not marked from environment menu, then it will not be shown inside menus)

Order of pressing keys:

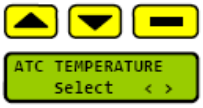

```
ATC TEMPERATURE
    Select   < >
```

If you are inside a menu then by using scanning keys, or If you are on the logo screen chose "ATC TEMPERATURE" menu first by pressing approval key and then menu scanning keys.

You can watch sensor temperatures by pressing an approval key.

```
[1]:+29°C
VCF:0.9680   < >
```

If there are more than one filling points ,then you can watch the temperatures of other sensors by using menu scanning keys.The digit "[1]" on the top left corner of the screen shows the nozzle number.

```
[2]:+29°C
VCF:0.9680   < >
```

```
[3]:+29°C
VCF:0.9680   < >
```

```
[4]:+29°C
VCF:0.9680   < >
```

You can exit the menu by using menu return key.

6.12 Printer — Pump Menu

Explanation :
If the receipt writer is connected and active ,the following operations can be made inside this menu.(if this choice is not marked from environment menu, then it will not be shown inside menus)

Order of pressing keys:

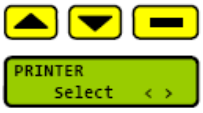

```
PRINTER
    Select   < >
```

If you are inside a menu then by using scanning keys,or If you are on the logo screen chose "PRINTER" menu first by pressing approval key and then menu scanning keys.

Enter to the sub functions by pressing approval keys.

```
SALE RECEIPT
     Print   < >
```

```
SHIFT RECEIPT
     Print   < >
```

```
SERVICE REPORT
     Print   < >
```

```
W&M REPORT
     Print   < >
```

```
SALE PRICES
     Print   < >
```

Select the sub functions by pressing scanning keys.

You can fulfill the chosen operation by pressing an approval key.

You can exit the menu by using menu return key.

Note:
You can see the detailed explanation about this menu from "RECEIPT PRINTER UNIT" brochure.

6.13 Information — Pump Menu

Explanation :
It includes general informations for watching only.

Order of pressing keys:

▲ ▼ ▬	If you are inside a menu then by using scanning keys,or If you are on the logo screen chose "INFORMATION " menu first by pressing approval key and then menu scanning keys.
INFO Select < >	
▬	Enter to sub functions by pressing an approval key.
▲ ▼	Select the required information by using menu scanning keys.
QUADRO 4x4 Teosis LCD < >	It shows the pump configuration setting and a chosen sales display type.
Version: v.1.2c Apr 13 2010 < >	It shows the software version and compiling date.
Serial No: S4s-0000222E < >	It shows the unique serial number.
CPU Temperature: +44.0°C < >	It shows the CPU temperature.
FLASH CRC: 0586 < >	It shows the software CRC value.
STA: 00-00-00-00 < >	It shows the pump operation condition.
Seed:FB2DFB2D Core:926951 < >	It shows the definitions related to passwords and pin codes.
Date:2010/04/13 Time:21:49:22< >	It shows the current date/time.
C	You can exit the menu by using menu return key.

6.14 Error Codes — Pump Menu

Explanation :
It shows the meanings and number of occurence of error messages on sales screen unit price display

Order of pressing keys:

▲ ▼ ▬	If you are inside a menu then by using scanning keys,or If you are on the logo screen chose "ERROR CODES " menu first by pressing approval key and then menu scanning keys
ERROR CODES Select < >	
▬	You can watch error messages by pressing an approval key.
▲ ▼	the error message you want to see by using menu scanning keys.
POWER FAILURE E-01 < >	The explanation of the message is seen on the top line of the screen,and on the bottom line the error code and the number showing how many times the error occurred can be seen.
C	You can exit the menu by pressing menu return key.

6.15 Shift Totals — Administrative Menu

Explanation :
Changing the unit prices.

Order of pressing keys:

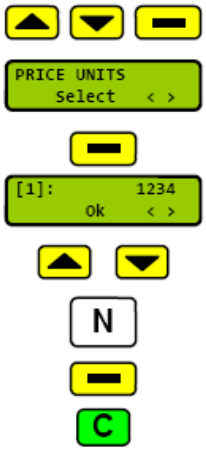

If you are inside menu then by using scanning keys,or If you are on the logo screen select "PRICE UNITS " menu first by pressing approval key and then menu scanning keys.

You can see and change the unit prices by pressing an approval key.

If there are more than one filling points ,then you can change the unit prices of other nozzles by using menu scanning keys.The digit "[1]" on the top left corner of the screen shows the nozzle number.

You can change the prices by pressing numeric keys.Approve the unit price change you have made by pressing an approval key.

You can exit the menu by using menu return key or you can delete backwards starting from the last number you have entered.

6.16 Price Units — Administrative Menu

Explanation :
These are deletable price sums of the nozzles.

Order of pressing keys:

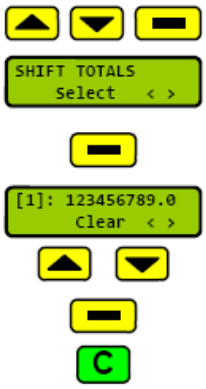

If you are inside a menu then by using scanning keys,or If you are on the logo screen chose "SHIFT TOTALS" menu first by pressing approval key and then menu scanning keys.

You can see shift totals by pressing an approval key.

If there are more than one filling points ,then you can watch the shift totals of other nozzles by using menu scanning keys.The digit "[1]" on the top left corner of the screen shows the nozzle number.

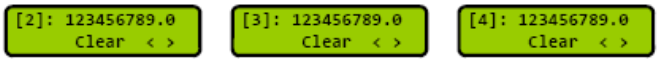

You can zeroize the shift totals you have chosen by pressing an approval key.

You can exit the menu by using menu return key.

6.17 Previous Prices — Administrative Menu

Explanation :
You can watch the previous unit prices from this menu with the changed date and hour . 20 price chages previously can be show.

Order of pressing keys:

If you are inside a menu then by using scanning keys,or If you are on the logo screen select "PREVIOUS PRICES" menu first by pressing approval key and then menu scanning keys.

```
PREVIOUS PRICES
    Select   < >
```

You can see the previous prices by pressing an approval key.

```
01-01: 1.234 EUR
2010/10/22-17:21
```

On the top left corner of the screen shows the previous number, nozzle number and price.
On the buttom of the screen shows the changed price date and time.

```
02-03: 1.034 EUR
2010/09/20-10:12
```

```
03-03: 1.204 EUR
2010/08/20-10:11
```

```
04-02: 1.000 EUR
2010/07/22-17:21
```

You can exit the menu by using menu return key.

6.18 Protocols — Administrative Menu

Explanation :
Protocol selection is made for serial communication.

Order of pressing keys:

If you are inside a menu then by using scannig keys or if you are on the logo screen select "PROTOCOLS" menu first by pressing approval key and then menu scanning keys.

```
PROTOCOLS
    Select   < >
```

You can see the protocol by pressing an approval key.

```
Offline
      Ok   < >
```

```
Modbus
      Ok   < >
```

```
TEOsis GPP
      Ok   < >
```

```
S4-DART
      Ok   < >
```

```
Fiscal Mode
      Ok   < >
```

You can select the other protocols by means of menu scanning keys and you can activate the protocol you have chosen by pressing an approval key.

Approve your selection by pressing an approve key.

You can exit the menu by using menu return key.

6.19 Time / Date Setup — Administrative Menu

Explanation:
Set the real time date and clock.

Order of pressing keys:

If you are inside a menu then by using scanning keys, or If you are on the logo screen select "TIME/DATE SETUP" menu first by pressing approval key and then menu scanning keys.

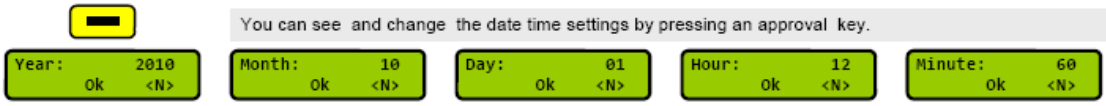

You can see and change the date time settings by pressing an approval key.

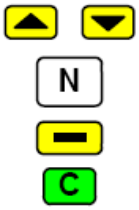

You can enter the date and time settings by using numeric keys. It passes to the next choice if you press an approval key. You can can select the settings you need by pressing menu scannig keys.

You can exit the menu by using menu return key or you can delete backwards starting from the last number you have entered.

6.20 Password Change — Administrative Menu

Explanation :
The password change of an administrator.

Order of pressing keys:

If you are inside a menu then by using scanning keys,or If you are on the logo screen select "PASSWORD CHANGE " menu first by pressing approval key and then menu scanning keys.

You can change the password of an administrator by pressing an approval key,

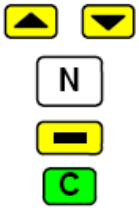

You can enter a four digit password of an administrator by using numeric keys and activate it by pressing an approval key.

You can exit the menu by using menu return key or you can delete backwards starting from the last number you have entered.

6.21 Default Settings

Factory exit presets are made by chosing " Petroleum Pump" template from a Service menu.These presets are shown on the table below. These presets can be changed according to an application.

		TEMPLATES		
	Factory Setting	Petroleum Pump	LPG Pump	CNG / LNG Pump
Electronic Totals	0	Does Not Change	Does Not Change	Does Not Change
Unit price	0	Does Not Change	Does Not Change	Does Not Change
Protocol	StandAlone	Does Not Change	Does Not Change	Does Not Change
Pump Number	0	Does Not Change	Does Not Change	Does Not Change
Date/Time	Up-To Date	Does Not Change	Does Not Change	Does Not Change
Preset Setup - Buton-1	100	Does Not Change	Does Not Change	Does Not Change
Preset Setup - Buton-2	500	Does Not Change	Does Not Change	Does Not Change
Preset Setup - Buton-3	100	Does Not Change	Does Not Change	Does Not Change
Preset Setup - Buton-4	500	Does Not Change	Does Not Change	Does Not Change
Preset Setup - Zero Units	2	Does Not Change	Does Not Change	Does Not Change
Password of an Administrator	0	Does Not Change	Does Not Change	Does Not Change
Product Definition	LPG	Normal Gasoline	LPG	LPG
Density	560	0	560	670
Valve Setting - Reduce.	300	Does Not Change	Does Not Change	Does Not Change
Valve Setting - Shut	20	20	20	0
Pump Limits - Start Delay	1	Does Not Change	Does Not Change	Does Not Change
Pump Limits - Stop Delay	1	Does Not Change	Does Not Change	Does Not Change
Pump Limits - Overtime	60	Does Not Change	Does Not Change	Does Not Change
Pump Limits - Disp. Offset	25	Does Not Change	Does Not Change	Does Not Change
Pump Limits - Flow Offset	59	Does Not Change	Does Not Change	Does Not Change
Pump Limits - LPG Offset	1	Does Not Change	1	Does Not Change
Pump Limits - LPG Off-Time	99	Does Not Change	99	Does Not Change
Pump Limits - Max. Amo	0	Does Not Change	Does Not Change	Does Not Change
Pump Limits - Max. Vol	999900	Does Not Change	Does Not Change	Does Not Change
Pump Limits - DART Timeout	20	Does Not Change	Does Not Change	Does Not Change
Decimal points - Unit Price	3	Does Not Change	Does Not Change	Does Not Change
Decimal points - Volume	2	Does Not Change	Does Not Change	Does Not Change
Decimal points - Amount	2	Does Not Change	Does Not Change	Does Not Change
Peripherals - ATC	Active	Does Not Change	Does Not Change	Does Not Change
Peripherals - Printer	Not Active	Does Not Change	Does Not Change	Does Not Change
Peripherals - Totalizer	Active	Does Not Change	Does Not Change	Does Not Change
Sales Screen Type	Teosis LCD	Does Not Change	Does Not Change	Does Not Change
Regional Code	EUROPEAN UNION	Does Not Change	Does Not Change	Does Not Change
Pump ID	0	Does Not Change	Does Not Change	Does Not Change

6.22 Errors Messages and Codes

PRIORITY	DESCRIPTIONS	SALES SCREEN	STATUS LIGHT	INFORMATION SCREEN	RESULT OF ERROR	OCCURENCE	ACTION REQUIRED
01	Main Power Failure	E-01	*blank*	*blank*	OUT OF ORDER	Anytime	*Check Power*
02	Power Supply Unit Failure	E-02	*blank*	*blank*	OUT OF ORDER	Anytime	*Service required*
03	Pump Locked	E-03		**!! Locked !!**	OUT OF ORDER	Anytime	*Service required*
04	FLASH CRC Error	E-04		FLASH CRC Error	OUT OF ORDER	Power Up	*Service required*
05	RAM Read / Write Error	E-05		RAM R/W Error	OUT OF ORDER	Anytime	*Service required*
06	FRAM CRC Error	E-06		FRAM CRC Error	OUT OF ORDER	Anytime	*Service required*
07	FRAM Read / Write Error	E-07		FRAM R/W Error	OUT OF ORDER	Anytime	*Service required*
08	System Mismatch	E-08		System Mismatch	OUT OF ORDER	Power Up	*Service required*
09	Watchdog Limit	E-09		Watchdog Limit	OUT OF ORDER	Anytime	*Service required*
10	I2C Port Error	E-10		I2C Port Error	OUT OF ORDER	Anytime	*Service required*
11	Undefined	E-11	Undefined				
12	Low Main Voltage	E-12		Low Voltage	Warning	Anytime	*When Normalized*
13	High Main Voltage	E-13		High Voltage	Warning	Anytime	*When Normalized*
14	Power Frequency Variations	E-14		Power Frequency	Warning	Anytime	*When Normalized*
15	Sale Display Unconnected	E-15		No Sale Display	Filling Not Possible	During Filling	*Connect Display*
16	Pulser Phease Error	E-16		Pulser Phase	Filling Not Possible	During Filling	*Check Pulser*
17	Pulser Current Error	E-17		Pulser Current	Filling Not Possible	During Filling	*Check Pulser*
18	Pulser CH-A Failure	E-18		Pulser CH-A Error	Filling Not Possible	During Filling	*Check Pulser*
19	Pulser CH-B Failure	E-19		Pulser CH-B Error	Filling Not Possible	During Filling	*Check Pulser*
20	Pulser Direction Error	E-20		Pulser Direction	Filling Not Possible	During Filling	*Check Pulser*
21	Pulser CPU Failure	E-21		Pulser MC Error	Filling Not Possible	During Filling	*Service required*
22	ATC Sensor Failure	E-22		ATC sensor Loss	Filling Not Possible	During Filling	*Check ATC Sensor*
23	Communication Timeout	E-23		Comm Timeout !	Filling Not Possible	During Filling	*Check Communication*
24	Undefined	E-24	Undefined				
25	Undefined	E-25	Undefined				
26	Totalizer Board Failure	E-26		Totalizer Module	Filling Not Possible	During Filling	*Check Totalizer Board*
27	Maintenance Time	E-27		Maintenance Time	Filling Not Possible	During Filling	*Service required*
28	Nozzle Disabled	E-28		Nozzle Disable	Filling Not Possible	During Filling	*Enable Nozzle*
29	Nozzle Out	E-29		Nozzle Open	Filling Not Possible	Power Up	*Nozzle In*
30	Self-Service Active	E-30		Self-Service On	Filling Not Possible	During Filling	*Disable Self-Service*
31	Unit Prices Undefined	E-31		Zero Unit Price	Filling Not Possible	During Filling	*Set Unit Prices*
32	Keypad Unit Failure	E-32		Keypad Board	Warning / Limited	Anytime	*Check Keypad Unit*
33	WD Reset	E-33		WD Reset	Warning	Anytime	*None*
34	Info Display Error	E-34		Blank	Warning / Limited	Anytime	*Check Keypad Unit*
35	Printer Unit Failure	E-35		Printer Module	Warning / Limited	During Printing	*Check Printer Unit*
36	Liter Overrange	E-36		Liter Overrange	Filling Not Possible	During Filling	*Nozzle In*
37	Amount Overrange	E-37		Amount Overrange	Filling Not Possible	During Filling	*Nozzle In*
38	Motor Overtime	E-38		Motor Overtime	Filling Not Possible	During Filling	*Nozzle In*
39	Valve Leakage	E-39		Valve Leakage	Filling Not Possible	During Filling	*Check Valve*
40	Preset Button Error	E-40		Preset Button Error	Warning / Limited	During Preset	*Check Button*
41	ATC Limit Overrange	E-41		ATC limit Over	Filling Not Possible	During Filling	*Nozzle In*
42	Nozzle Out	E-42		Tabanca açıldı	Warning	During Service menu	*Nozzle In*
43	LPG Timeout	E-43		LPG Timeout	Filling Not Possible	During Filling	*Nozzle In*
44	Low Flow Timeout	E-44		Low-Flow Timeout	Filling Not Possible	During Filling	*Nozzle In*
NO ERROR / NORMAL STATE							

6.23 Errors Messages and Codes - Additional

Priority	Description	Sales Screen	İnformation Screen	Result of Error	Occurence	Action Required
45	ATC Unmatched	E-45	ATC Unmatched	Filling not possible	Anytime	Service required
46	No Limit Select	E-46	No Limit Select	Filling not possible	Anytime	Select Limit
47	Tube Not Ready	E-47	Tube Not Ready	Filling not possible	Anytime	Put on Tube
48	Tube over Limit	E-48	Tube over Limit	Filling not possible	Anytime	Change Tube

Appendix A – Cable Connection Diagram

1 NOZZLE DISPENSER

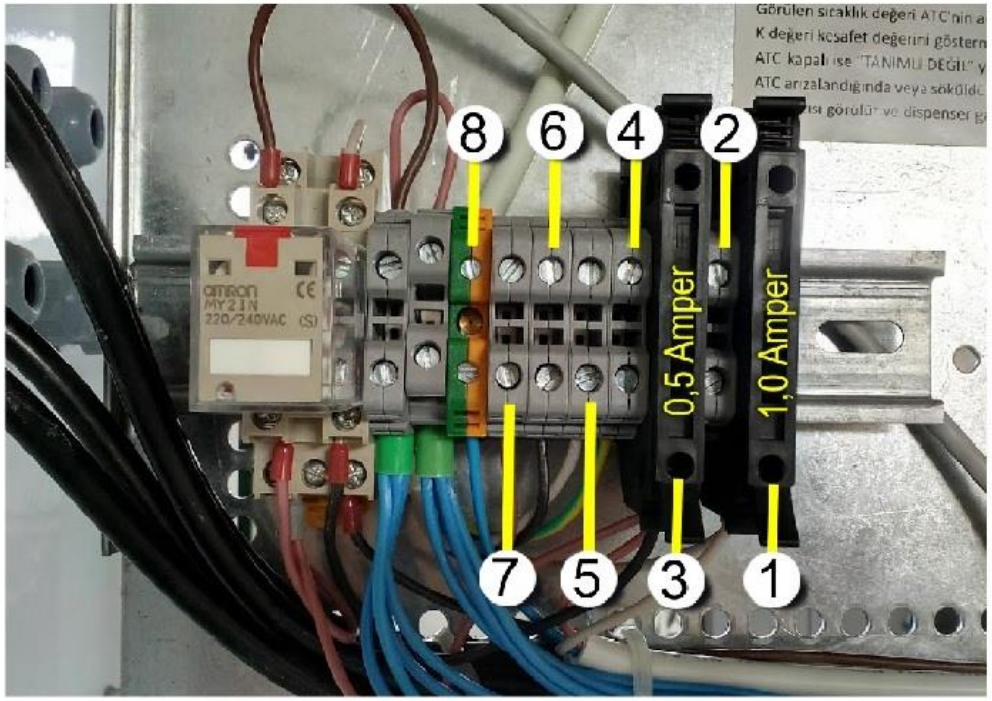

KLEMENS BAĞLANTI DETAYI *Terminal Connections*		
1	Faz 220 V	*Phase 220 V*
2	Nötr	*Neutr*
3	Motor Sinyal 220 V	*Motor Signal 220 V*
4	Acil Stop	*Emergency Stop*
5	Acil Stop	*Emergency Stop*
6	Acil Stop	*Emergency Stop*
7	Acil Stop	*Emergency Stop*
8	Topraklama	*Grounding*

Appendix A – Cable Connection Diagram

2 NOZZLE DISPENSER

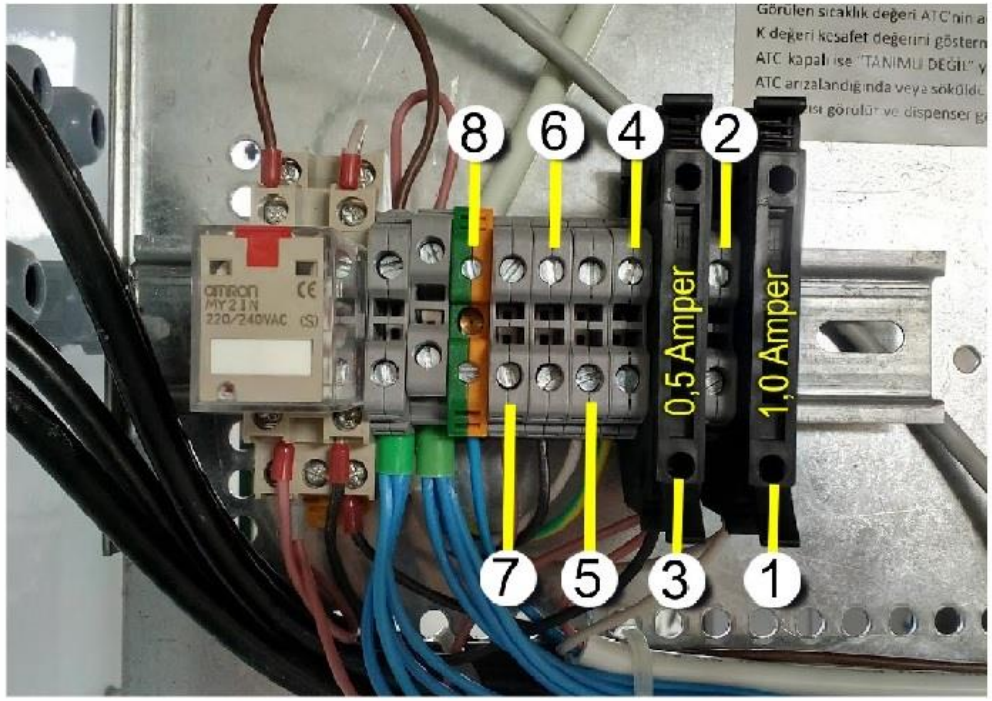

KLEMENS BAĞLANTI DETAYI *Terminal Connections*		
1	Faz 220 V	*Phase 220 V*
2	Nötr	*Neutr*
3	Motor Sinyal 220 V	*Motor Signal 220 V*
4	Acil Stop	*Emergency Stop*
5	Acil Stop	*Emergency Stop*
6	Acil Stop	*Emergency Stop*
7	Acil Stop	*Emergency Stop*
8	Topraklama	*Grounding*

Appendix A – Cable Connection Diagram

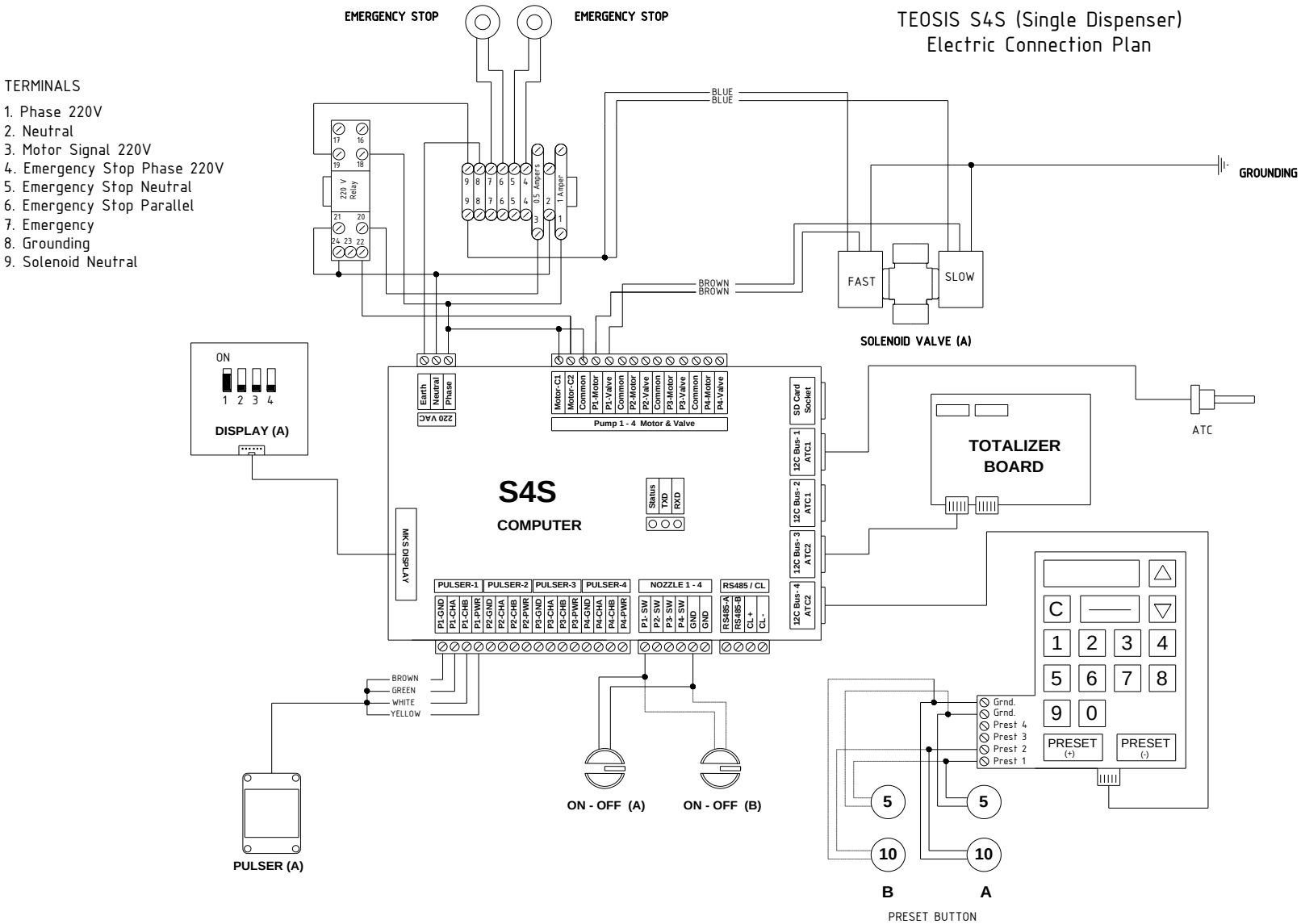

Appendix A – Cable Connection Diagram

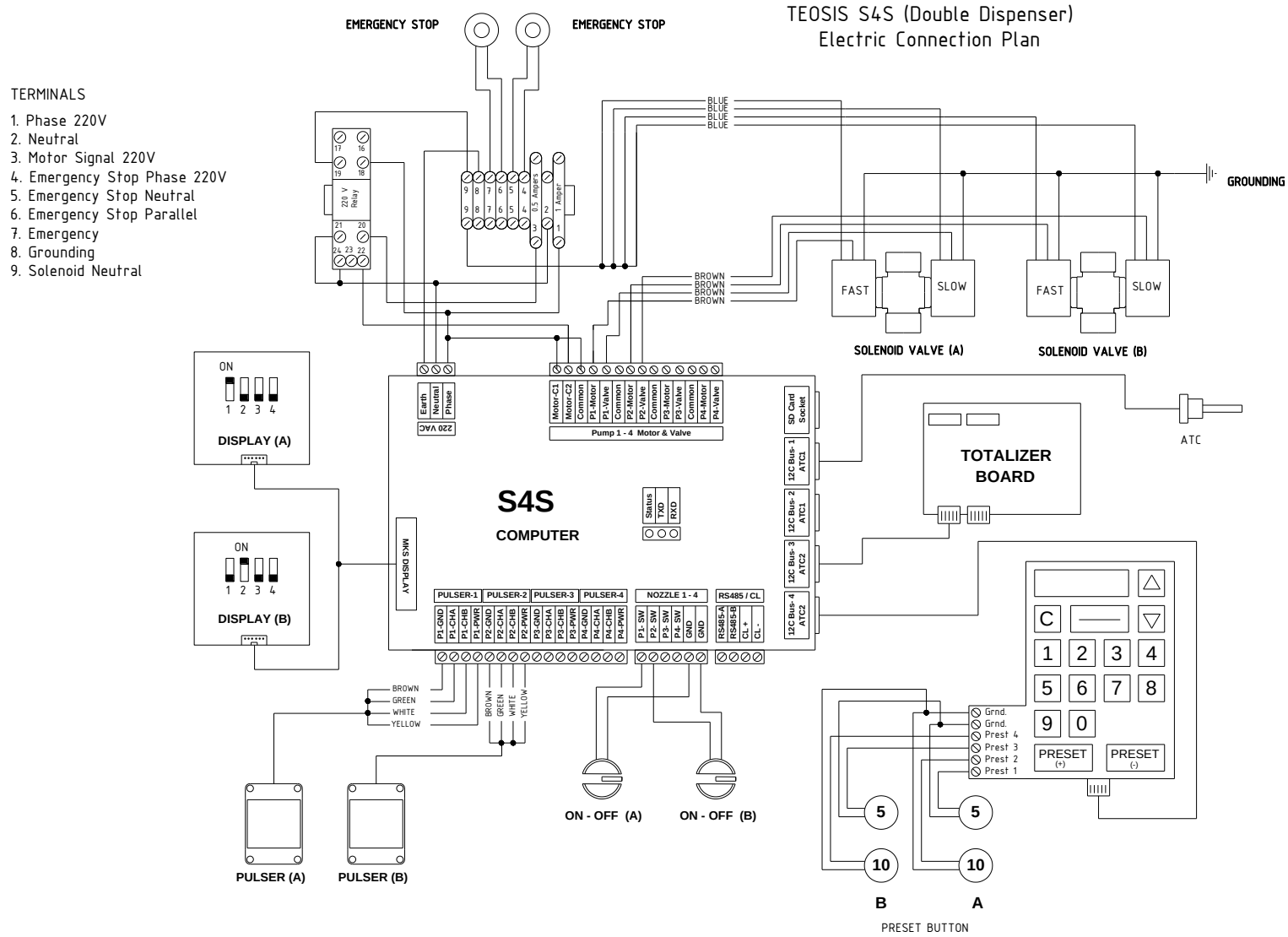

Appendix B – Failure Guide

TROUBLESHOOTING			
PROBLEM	**POSSIBLE CAUSES?**	WHAT TO CHECK?	**HOW TO FIX THE PROBLEM IF DETERMINED?**
Dispenser is not activated even though it is switched “on”.	a) Fuse in the CPU is blown.	a) Check the fuse in the CPU.	a) Replace the fuse.
	b) Power section of CPU card that powers solenoids may be broken.	b) Check the CPU card.	b) Replace the CPU card.
	c) Solenoid coil may be burnt.	c) Check if solenoid inducts or not.	c) Solenoid should be replaced if broken.
	d) Pneumatic valves may be closed.	d) Check if the valves are open.	d) Open valves if closed, replace nitrogen tube if necessary.
	e) Engine may not generate pressure.	e) Check the engine.	e) Engine should be replaced if not generating pressure.
	f) No signal from the relay.	f) Check if a signal is received from the relay.	f) Make sure that signal is received from relay.
	g) On-off switch is broken.	g) Check the button.	g) Replace the button if broken.
	h) Thermic on the table may be blown.	h) Check the thermic.	h) Thermic should be corrected if blown.
Nozzle dispenses gas but nothing is displayed.	a) Pulser may be broken.	a) Check the pulser.	a) Pulser should be replaced.
	b) Display may be broken.	b) Replace display and check if the problem is fixed.	b) Display should be replaced if broken.
	c) Display card may be broken.	c) Replace new display card and check if the problem is fixed.	c) Display card should be replaced if broken.
	d) Meter distribution valve pin may be removed..	d) Check the pin. (If motion transferring shaft can be moved to both sides when checked with hand, it is removed.)	d) Pin should be plugged back.

Appendix B – Failure Guide

TROUBLESHOOTING			
PROBLEM	**POSSIBLE CAUSES?**	WHAT TO CHECK?	**HOW TO FIX THE PROBLEM IF DETERMINED?**
Dispenser delivers too much or too little	a) Distribution valve, Charcoal, Felt may be damaged.	a) Check distribution valve, charcoal and felt.	a) Replace broken part.
	b) Adjustment roller may need readjustment.	b) Check the adjustment roller.	b) Readjust the adjustment roller.
	c) Pulser may be broken.	c) Check the pulser.	c) Replace the pulser.
	d) Pulser shaft may have torsion..	d) Check the pulser shaft.	d) Fix the torsion.
	e) Piston arms may be twisted.	e) Check the piston arms.	e) Replace the piston arms.
	f) Piston cups may be torn or worn .	f) Check the piston cups.	f) Replace the piston cups.
Dispenser flow rate is less than expected.	a) Filter may be clogged.	a) Check the filter.	a) Change the filter.
	b) Solenoids may be clogged or solenoid core may leak.	b) Check the solenoids.	b) Clean solenoid, replace the core, and replace solenoid if necessary.
	c) Diver may not generate sufficient pressure.	c) Check the manometer on the diver.	c) Replace the diver pump.
	d) Direction of the diver pump may be wrong.	d) Check the diver pump revolution direction.	d) Change the position of two phase cables of the diver pump on the control panel.
	e) Differential rubbers may be torn.	e) Check the differential valve.	e) Replace the differential rubbers.
	f) Break-away coupling may be clogged, broken or misplaced.	f) Check the break-away coupling.	f) Clean the break-away coupling, replace it if broken.
	g) Nozzle may be damaged.	g) Check the nozzle.	g) Replace the nozzle.
	h) Vehicle tank may be full.	h) Check the lever on the tank.	h) Stop filling the vehicle with full tank.
	I) Pulser shaft may be jammed.	I) Check the pulser shaft.	I) Loosen and tighten adjustment bolts.

Appendix B – Failure Guide

TROUBLESHOOTING			
PROBLEM	**POSSIBLE CAUSES?**	**WHAT TO CHECK?**	**HOW TO FIX THE PROBLEM IF DETERMINED?**
Price counter does not stop.	a) Preset or its connections may be short circuited.	a) Check the connections.	a) Correct the connections and change preset if situation persists.
Unit price window blinks.	a) Pr-In keys on the CPU may be jammed.	a) Check the keys on the CPU.	a) Fix the problem by pressing keys.
	b) CPU cap may be broken.	b) Check the CPU cap.	b) Replace the CPU cap.
Display shows incorrect price.	a) Parameters are entered incorrectly into CPU card.	a) Check the parameters entered into CPU card.	a) Re-enter parameters accurately.
	b) Solenoids may leak.	b) Check the solenoids.	b) Replace solenonids.
Nothing on display.	a) Display temperature may be more than 40°. (display is erased in this case)	a) Check the display temperature.	a) Problem shall be fixed when display temperature is normal.
	b) Display card may be broken.	b) Check the display card.	b) Replace the display card..
	c) There may be problem on display connections.	c) Check the display connections.	c) Connect cables correctly.
Nozzle does not deliver gas even though it is switched “on” and diver is activated.	a) Break-away coupling on the hose may be closed.	a) Check if break-away coupling is placed correctly.	a) Firmly place or replace break-away coupling.
	b) Solenoid valves may not open.	b) Check if solenoid valves are opening.	b) Replace solenoid valves.
	c) Pneumatic valves may be closed.	c) Check if nitrogen tube is full or not.	c) Replace nitrogen tube.
	d) Check valve in the nozzle may be broken.	d) Check the in-nozzle check valve.	d) Replace in-nozzle check valve if broken.

Appendix B – Failure Guide

TROUBLESHOOTING			
PROBLEM	**POSSIBLE CAUSES?**	**WHAT TO CHECK?**	**HOW TO FIX THE PROBLEM IF DETERMINED?**
Dispenser does not deliver gas.	a) Break-away coupling may have come away.	a) Check the break-away coupling on the hose.	a) Place the break-away coupling into position.
	b) Nitrogen tube may be empty.	b) Check the nitrogen tube.	b) Replace the nitrogen tube.
	c) CPU fuse may be blown.	c) Check the fuse.	c) Replace the CPU fuse.
	d) Nozzle may be broken.	d) Check the nozzle.	d) Replace the nozzle.
	e) Solenoids may be broken.	e) Check the solenoids.	e) Replace the solenoids.
Display flashes at any parameter.	a) PR button on the CPU card may be stuck.	a) Observe dispenser display.	a) Press PR key until EP is displayed.
Gas alarm sounds.	a) There may be gas leakage.	a) Check for leakages on all systems.	a) Press gas alarm reset key for 3 seconds.
	b) Gas detector may be broken.	b) Check the gas detector.	b) Replace the gas detector.
Thermic relay on the panel blows continuously.	a) Thermic relay may be out of adjustment.	a) Check the current drawn from the network by the pump.	a) Replace the diver pump.
	b) Thermic relay may be out of adjustment.	b) Check the thermic relay.	b) Adjust thermic relay.
Nozzle leaks gas.	a) Washer located on the tip of the nozzle may be worn.	a) Check the nozzle washer.	a) Remove washer and reverse it. Replace the washer if problem persists.
	b) Threads of the nozzle may be broken.	b) Check the nozzle.	b) Replace the nozzle.
Totalizer does not work.	a) Totalizer's coils may be broken.	a) Check the totalizers.	a) Replace the totalizers.
	b) Dispenser control unit may not be sending signals to totalizers.	b) Check the CPU card.	b) Replace the CPU card.
	c) Graphics card may be broken.	c) Check the graphics card.	c) Replace the graphics card.

Appendix B – Failure Guide

TROUBLESHOOTING			
PROBLEM	**POSSIBLE CAUSES?**	**WHAT TO CHECK?**	**HOW TO FIX THE PROBLEM IF DETERMINED?**
Display continues to count even though the nozzle is disconnected.	a) Safety valve may leak.	a) Check the safety valve.	a) Clean any dirt if exists.
	b) Parameter values may be interfered.	b) Check the parameter values.	b) Adjust parameter settings.
	c) CPU card may be broken.	c) Check the CPU card.	c) Replace the CPU card.
	d) Pulser may be broken.	d) Check the pulser.	d) Replace the pulser.
Delivery stops while dispensing gas.	a) Pump pressure may be drooped.	a) Check the pump pressure.	a) Replace the pump if broken.
	b) Electrical interruption.	b) Check the voltage.	b) Restore electrical connection.
	c) Pressure sensor may be broken.	c) Check the pressure sensor.	c) Replace the pressure sensor.
	d) Analog adjustment may be incorrect.	d) Check the analog values.	d) Adjust the analog values.
	e) Gas sensor may be interrupting gas flow due to a leakage.	e) Perform leakage test on al systems.	e) Fix found leaks.
Dispenser Fluorescent is off.	a) Fluorescent may be died out.	a) Check the Fluorescent.	a) Replace Fluorescent.
	b) Fluorescent fuse may be blown.		b) Replace the fuse.
	c) Fluorescent may be loosened.		c) Place fluorescent correctly.
Dispenser Manometer is not working.	a) Manometer may be broken.	a) Check the manometer.	a) Replace the manometer.

Appendix C – DOs and DON'Ts

DO FOLLOWING

DO…

- Consult with station director or administrator about the project and procedures before servicing a dispenser.
- Review dangerous zones on the work site and determine necessary safety precautions relying on your safety training and experience.
- Locate extinguishers on the work site before commissioning any process involving LPG.
- Be informed of steam and other dangerous conditions.
- Disconnect and lock power supply before opening the dispenser for maintenance. Make sure that valves under the dispenser are closed BEFORE commencing maintenance.
- Be informed of relevant dangerous zone classifications.
- Utilize equipments like safety cones, barricades and barrier bands in order to isolate work site and protect technician.
- Wear safety clothing like phosphorescent vest, goggles and gloves.
- Check the perimeter of the work site.
- Place nozzle into the dispenser carefully.
- Get totalizer results and record them in co-ordination with station director or administrator.

DO NOT FOLLOWING

DON’T…

- Do not allow unauthorized persons to stay close to the dispenser or work site during demounting or gas discharge of the dispensers.
- Do not left the dispenser caps open after completing maintenance.
- Do not allow smoking, igniting or fire devices within the perimeter of the work site.
- Do not work outside of the barricaded area.
- Do not remove safety cones, barrier band or service vehicle until the work is completed.
- Do not leave station without having report signed by station director or administrator.

Notes :

Akşemsettin Mahallesi Tavukçuyolu Sokak No: 23
Sultanbeyli 34925 Istanbul / TURKIYE
T +90 216 487 5924
F +90 216 487 5986
E info@yenen.com
www.yenen.com